Damona 3

aura™

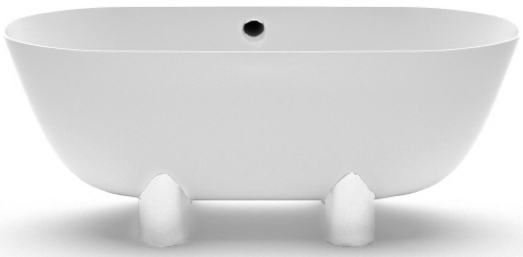

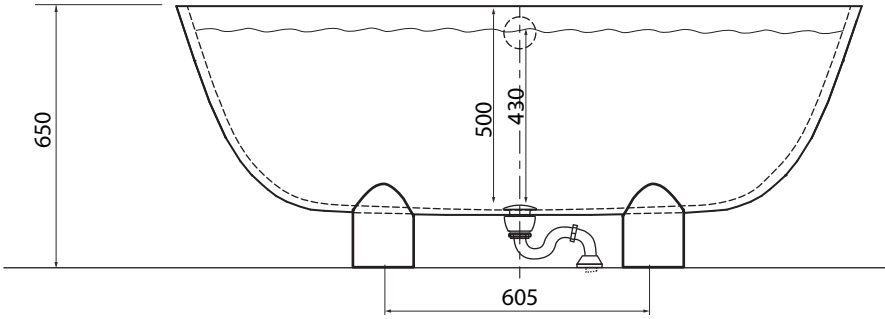

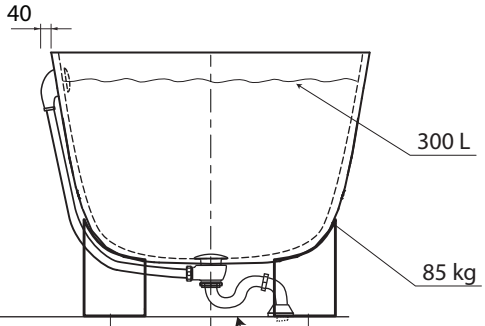

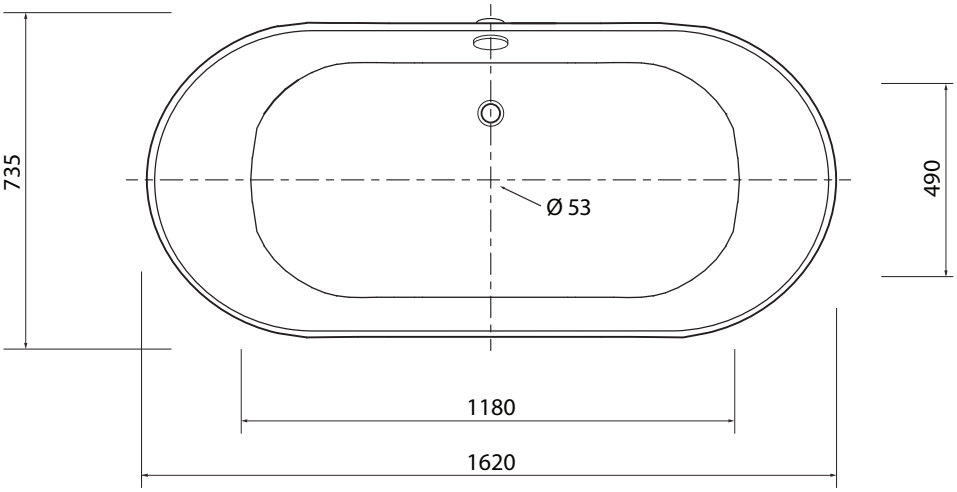

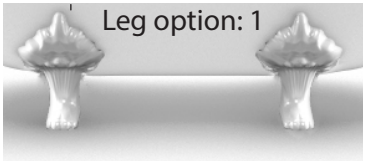

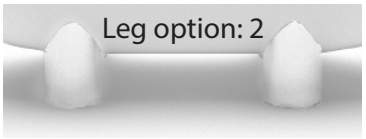

Product size is subject to a size variance of +/- 0,2 %