Eracura

aura™

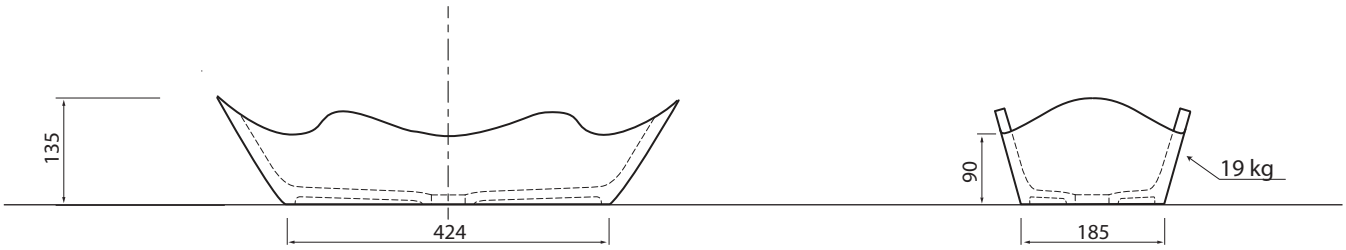

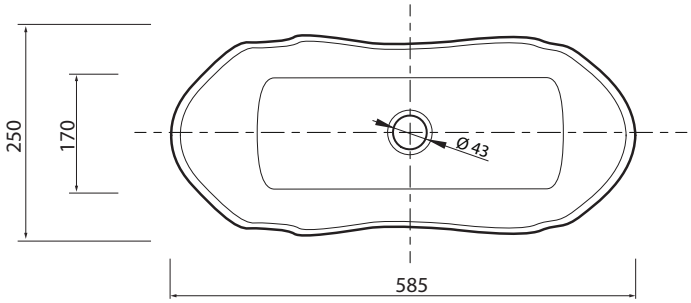

Product size is subject to a size variance of +/- 0,2 %